| MISC | BU6 | SK0 | SK1 | F2 | T1 | F1 LA701 LA751 | D14 | D702 D23 D701 | TS8 | D15 TS7 |
|---|---|---|---|---|---|---|---|---|---|---|
| C | | | | | | 47 48 | 701 | | 50 | 41 19 51 |
| R | | | | | | 49 820 | 41 | 72 73 | 74 75 | 76 64 207 |

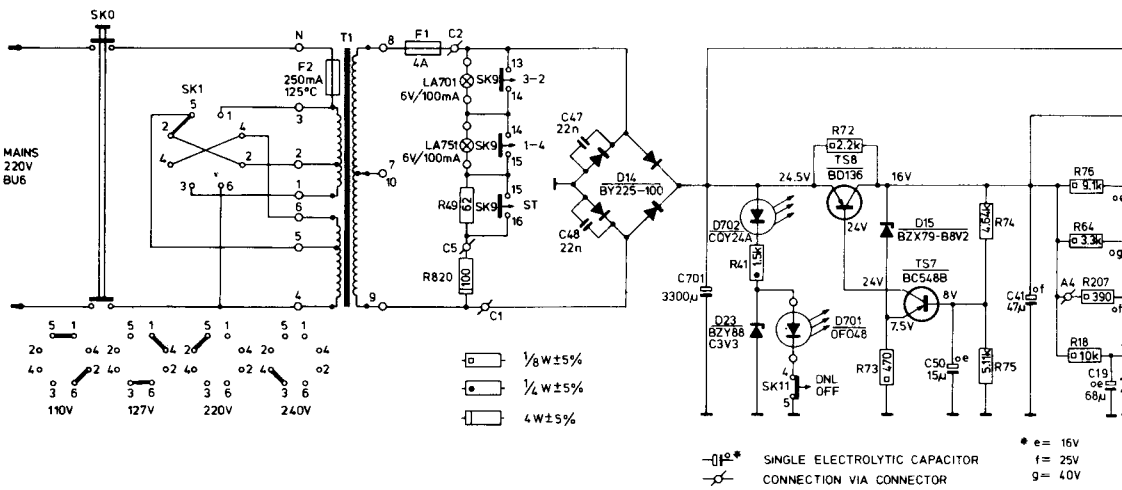


Fig. 37

| MISC | G3 | D207 | TS204 | D391.204.205.BU5 | TS392.D201.TS391 | RE2 | D801.18...20.TS9.RE1.D2.206.22.TS19.203.202.15.11.D29.203.TS201.M3 | U2a | M1.TS13.D12 | D10.TS14 | M2 | D11 | TS16. |
|---|---|---|---|---|---|---|---|---|---|---|---|---|---|
| C | | | | 203 391 204 | | | 207 805 44.57 62 208 | 201 | | | | 202 | |
| R | | | 204 | 202. 394. 210 203. 392 393 395 | 65 100. 391 67...71 | 306 308. | 303 56.57.396.62.63.209.304.61.213.212.211.208.215 | 214 | 309 | 310 | | 307. 60 | |

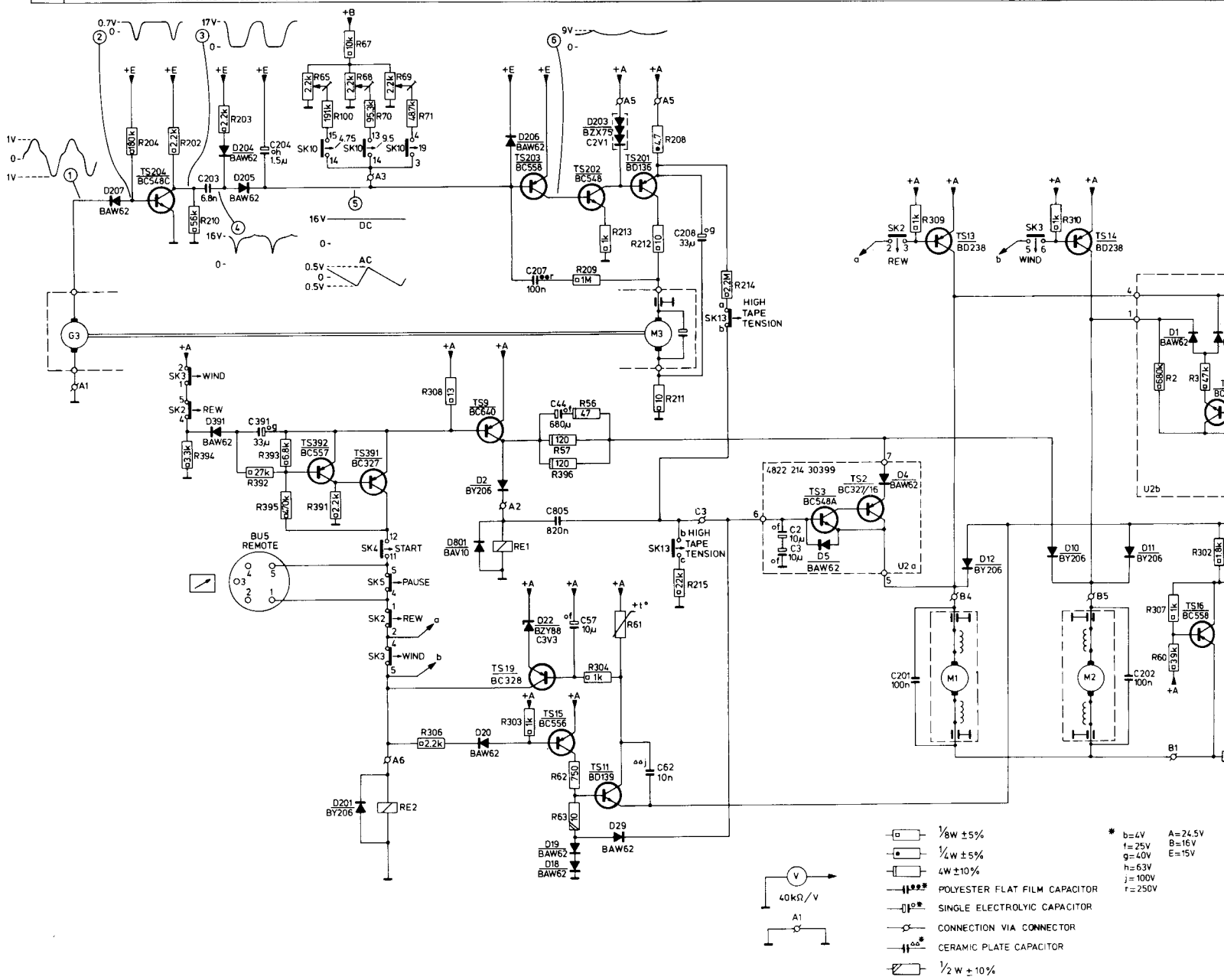


Fig. 38

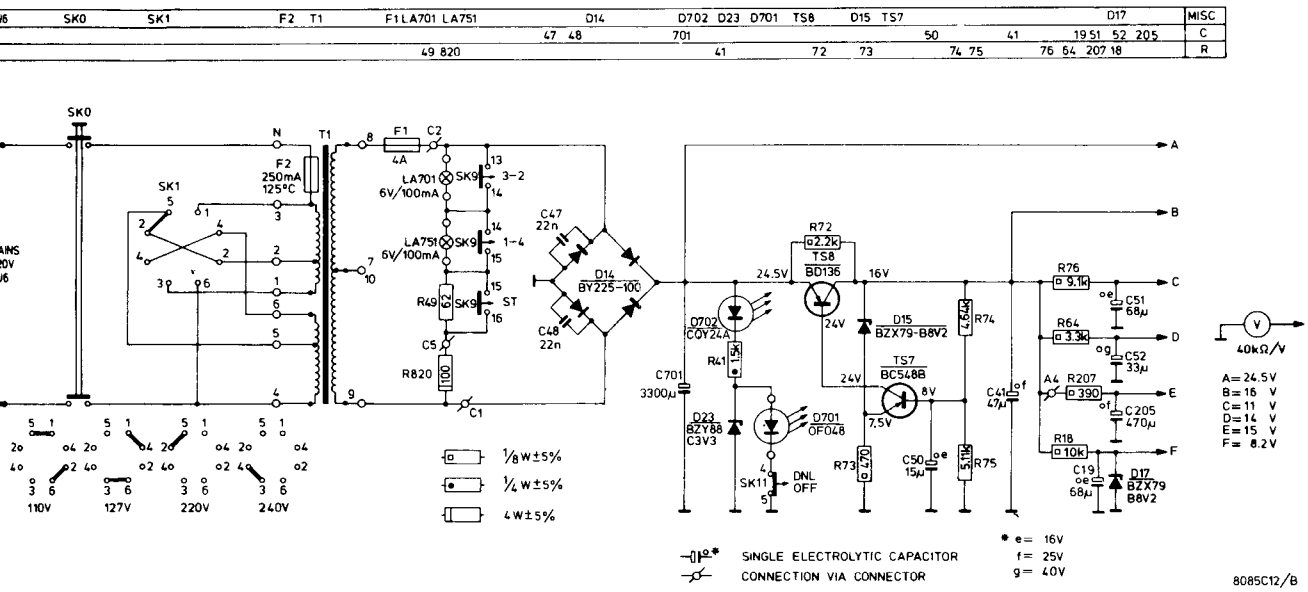
SK0
SK1
F2 T1
F1 LA701 LA751
D14
D702 D23 D701 TS8
D15 TS7
D17
MISC
C
R
T1
F1 4A
C2
F2 250mA 125°C
LA701 6V/100mA
LA751 6V/100mA
SK9
R49 62
C5
R820 100
C1
C47 22n
C48 22n
D14 BY225-100
R72 2.2k
TS8 BD136
24.5V
16V
D702 COY24A
R41 1.5k
C701 3300µ
D23 BZY88 C3V3
D701 OF048
SK11
DNL OFF
D15 BZX79-B8V2
TS7 BC548B
R74 4.64k
R73 470
C50 15µ
R75 5.11k
C41 47µ
R76 9.1k
C51 68µ
R64 3.3k
C52 33µ
R207 390
C205 470µ
R18 10k
C19 68µ
D17 BZX79 B8V2
40kΩ/V
A=24.5V
B=16 V
C=11 V
D=14 V
E=15 V
F=8.2V
110V
127V
220V
240V
1/8W±5%
1/4W±5%
4W±5%
SINGLE ELECTROLYTIC CAPACITOR
CONNECTION VIA CONNECTOR
* e= 16V
f= 25V
g= 40V
8085C12/B

Fig. **37**

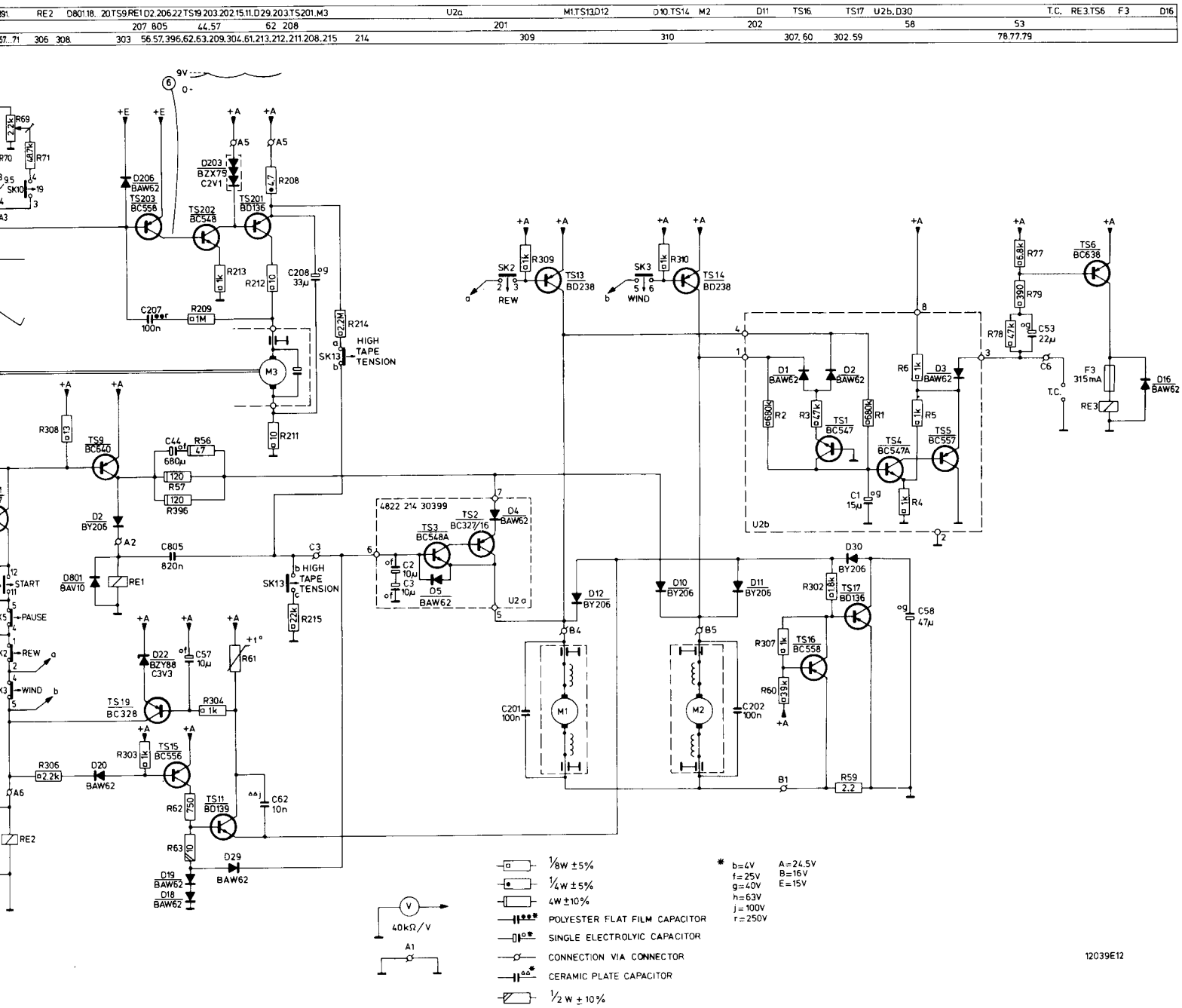
RE2
D801 18. 20 TS9 RE1 D2.206.22 TS19 203.202.15.11. D29.203 TS201.M3
U2a
M1 TS13 D12
D10 TS14 M2
D11 TS16
TS17 U2b, D30
T.C. RE3 TS6 F3 D16
9V
R69 2.2k
R70
R71 4.87k
SK10
D206 BAW62
TS203 BC556
D203 BZX79 C2V1
TS202 BC548
TS201 BD136
R208 4.7
R213 1k
R212 10
C208 33µ
C207 100n
R209 1M
R214 2.2M
SK13
HIGH TAPE TENSION
M3
R211 10
R308 13
TS9 BC640
C44 680µ
R56 47
R57 120
R396 120
D2 BY206
D801 BAV10
RE1
C805 820n
C3
SK13
HIGH TAPE TENSION
R215 22k
START
PAUSE
REW
WIND
D22 BZY88 C3V3
C57 10µ
R61
TS19 BC328
R304 1k
R303 1k
TS15 BC556
R306 2.2k
D20 BAW62
R62 750
TS11 BD139
C62 10n
R63 10
D29 BAW62
D19 BAW62
D18 BAW62
RE2
4822 214 30399
TS3 BC548A
TS2 BC327/16
D4 BAW62
C2 10µ
C3 10µ
D5 BAW62
U2a
SK2
R309 1k
TS13 BD238
SK3
R310 1k
TS14 BD238
D12 BY206
D10 BY206
D11 BY206
B4
B5
M1
M2
C201 100n
C202 100n
B1
R59 2.2
D1 BAW62
D2 BAW62
D3 BAW62
R2 680k
R3 47k
R1 680k
TS1 BC547
TS4 BC547A
TS5 BC557
R6 1k
R5 1k
R4 1k
C1 15µ
U2b
D30 BY206
R302 1.8k
TS17 BD136
C58 47µ
R307 1k
TS16 BC558
R60 39k
R77 6.8k
TS6 BC638
R79 390
R78 4.7k
C53 22µ
C6
T.C.
F3 315mA
RE3
D16 BAW62
40kΩ/V
A1
1/8W ±5%
1/4W ±5%
4W ±10%
POLYESTER FLAT FILM CAPACITOR
SINGLE ELECTROLYIC CAPACITOR
CONNECTION VIA CONNECTOR
CERAMIC PLATE CAPACITOR
1/2 W ± 10%
* b=4V
f=25V
g=40V
h=63V
j=100V
r=250V
A=24.5V
B=16V
E=15V
12039E12

Fig. **38**